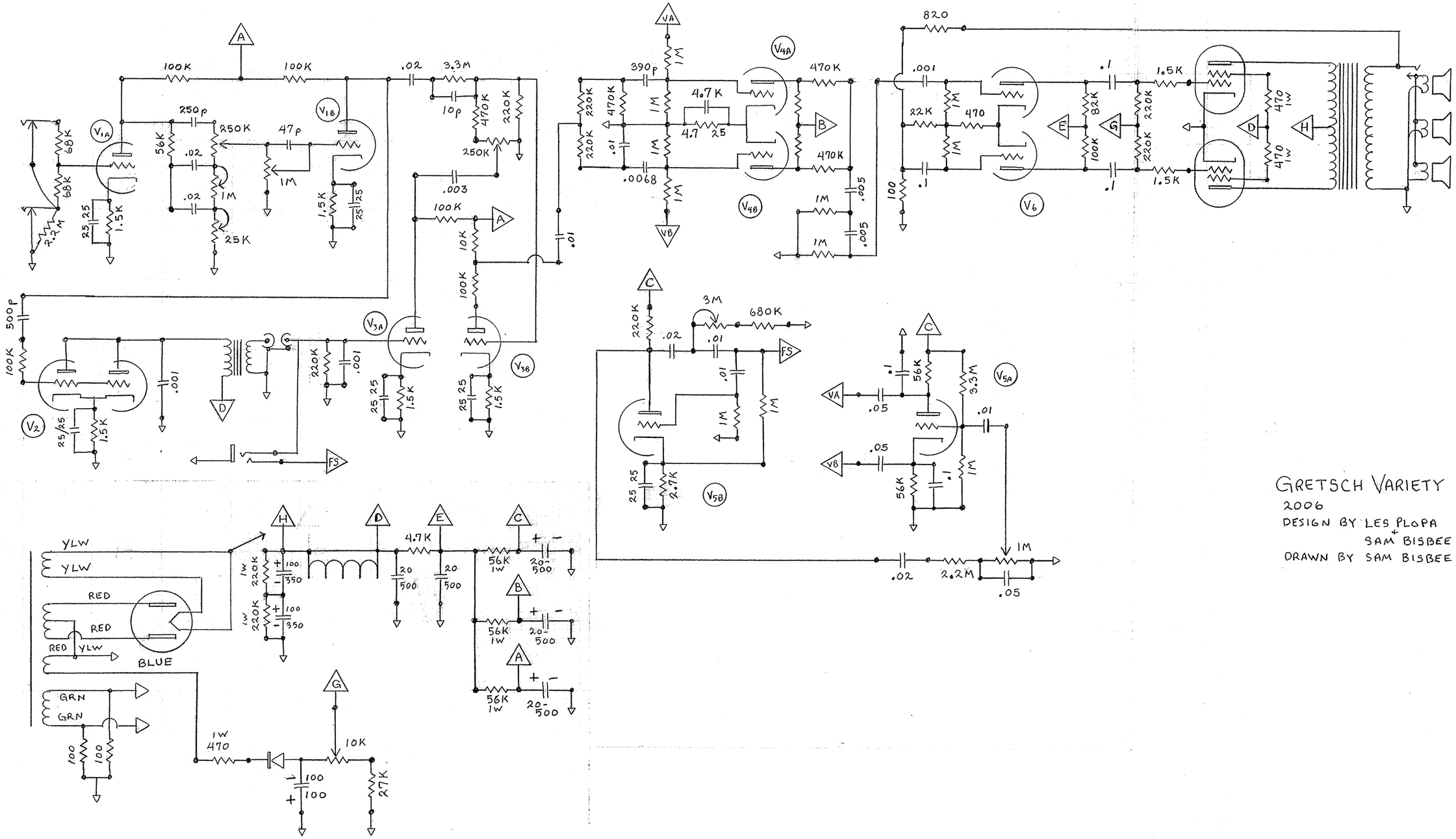
V1A
V1B
V2
V3A
V3B
V4A
V4B
V5A
V5B
V6
100K
250p
250K
47p
56K
.02
1M
25K
68K
2.2M
25/25
1.5K
3.3M
10p
470K
220K
.003
10K
.01
390p
4.7K
4.7
.0068
.001
500p
680K
3M
.05
.1
820
22K
470
82K
100K
1.5K
470 1W
100
FS
YLW
RED
BLUE
GRN
1W 220K
100/350
20/500
56K 1W
1W 470
27K
GRETSCH VARIETY
2006
DESIGN BY LES PLOPA
+ SAM BISBEE
DRAWN BY SAM BISBEE